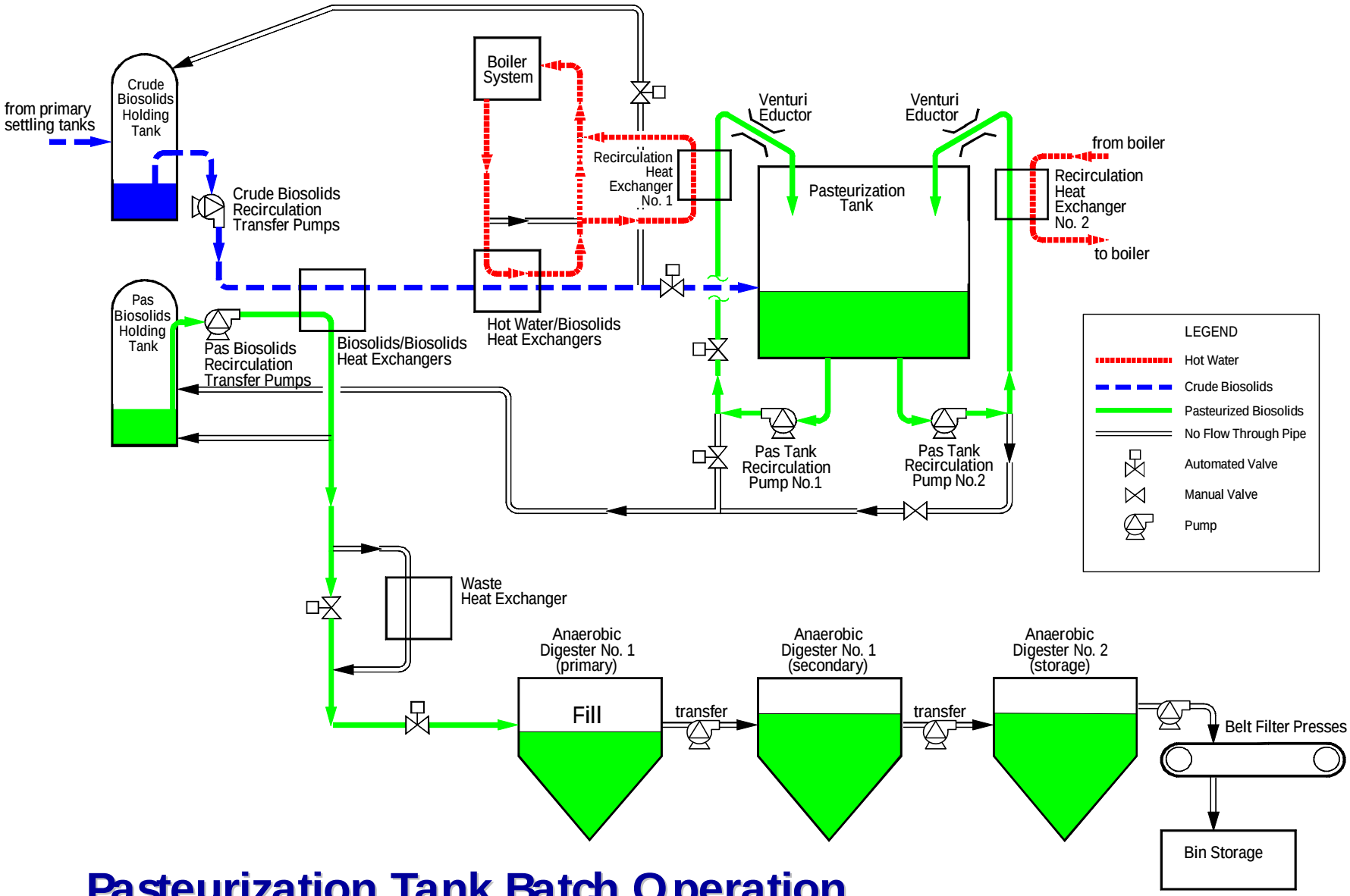

Pasteurization Tank Batch Operation